PROPERTY OF PARKWAY PLASTICS

PPI IS NOT RESPONSIBLE FOR PRODUCT COMPATABILITY.
NOT ALL MATERIALS ARE SUITABLE FOR ALL APPLICATIONS.

IT IS THE BUYER'S SOLE RESPONSIBILITY TO TEST THE COMPATIBILTY
OF THEIR PRODUCTS WITH PARKWAY'S PRODUCTS & SERVICES.

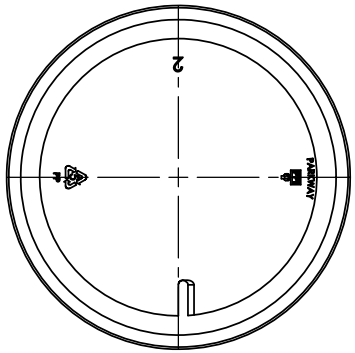

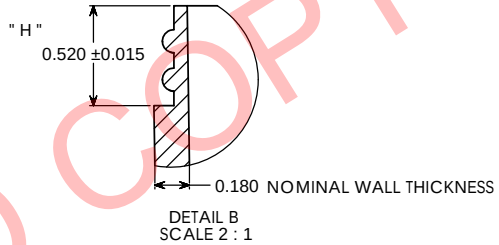

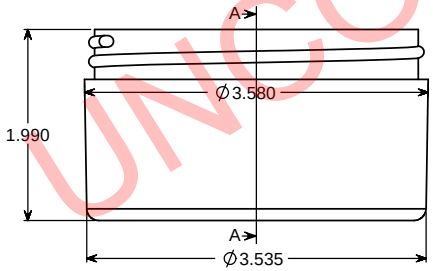

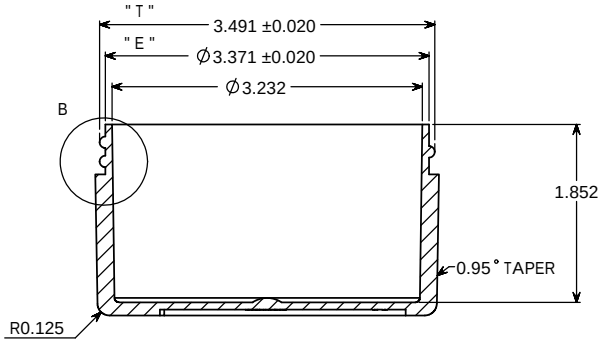

SECTION A-A

NOTE

Manufacturer reserves the right to change specifications without notice. All purchase order for the item herein described, must be accompanied by a copy of this print. All dimensions have a tolerance of +/- 3 % unless otherwise specified.
SIDEWALL CAMBER .050" PER SIDE MAX.
THREAD = GCMI 400- CT FINISH
5 THREADS PER INCH.

OVERFLOW: 250 ML
WEIGHT: 56.5 GRAMS ± 5 GRAMS

UNCONTROLLED COPY

" T " DIMENSION	3.491 ± 0.020	UNLESS OTHERWISE SPECIFIED:		NAME	DATE
" E " DIMENSION	3.371 ± 0.020	DIMENSIONS ARE IN INCHES TOLERANCES: FRACTIONAL ± ANGULAR: MACH ± BEND ± TWO PLACE DECIMAL ± THREE PLACE DECIMAL ±	DRAWN	G.W.W	03/15/13
" H " DIMENSION	0.520 ± 0.015		CHECKED		
SECTION VIEW A - A	JAR		ENG APPR.		
DETAIL VIEW B	" H " DIMENSION	MATERIAL S10-01	MFG APPR.		
		COLORANT NA	Q.A.		
NEXT ASSY	USED ON	DECORATION NA	COMMENTS: REPLACES PRINT # R689TWPP		
APPLICATION		DO NOT SCALE DRAWING			

PROPRIETARY AND CONFIDENTIAL
THE INFORMATION CONTAINED IN THIS DRAWING IS THE SOLE PROPERTY OF PARKWAY PLASTICS INC. ANY REPRODUCTION IN PART OR AS A WHOLE WITHOUT THE WRITTEN PERMISSION OF PARKWAY PLASTICS INC IS PROHIBITED.

PARKWAY PLASTICS INC

TITLE: 6 OZ 89 MM THICK WALL POLYPROPYLENE JAR (CUSTOMER PRINT)

SIZE	DWG. NO.	REV
C	B0890600PPC	

SCALE: 1:1 | WEIGHT: | SHEET 1 OF 1