PROPERTY OF PARKWAY PLASTICS

PPI IS NOT RESPONSIBLE FOR PRODUCT COMPATABILITY.
NOT ALL MATERIALS ARE SUITABLE FOR ALL APPLICATIONS.

IT IS THE BUYER'S SOLE RESPONSIBILITY TO TEST THE COMPATIBILTY
OF THEIR PRODUCTS WITH PARKWAY'S PRODUCTS & SERVICES.

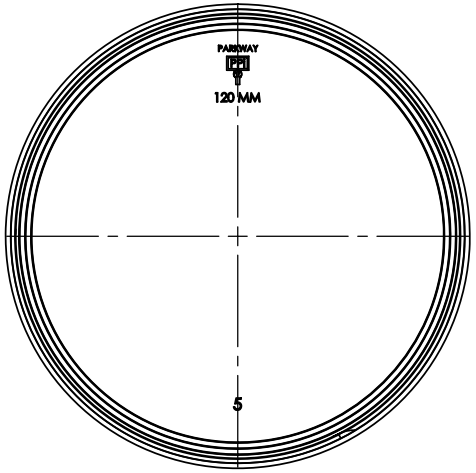

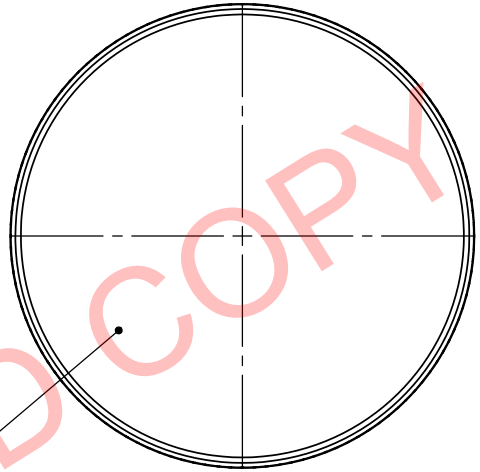

UNCONTROLLED COPY

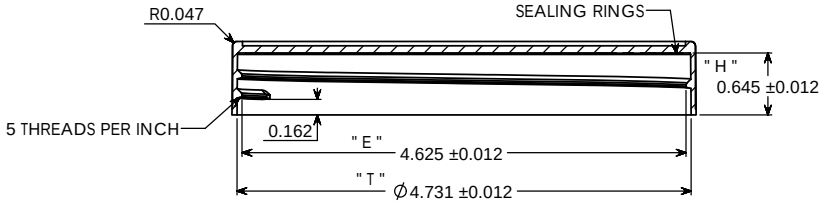

SECTION A-A

NOTE
=======

MANUFACTURER RESERVES RIGHT TO
CHANGE SPECIFICATIONS WITHOUT NOTICE

WEIGHT: 27 GRAMS ± 2 GRAMS

" T " DIMENSION	4.731 ± 0.012	UNLESS OTHERWISE SPECIFIED:		NAME	DATE
" E " DIMENSION	4.625 ± 0.012	DIMENSIONS ARE IN INCHES	DRAWN	G.W.W	12/12/12
" H " DIMENSION	0.645 ± 0.012	TOLERANCES: FRACTIONAL ±	CHECKED		
" A " DIMENSION	4.835 ± 0.012	ANGULAR: MACH ± BEND ±	ENG APPR.		
		TWO PLACE DECIMAL ±	MFG APPR.		
" B " DIMENSION	0.765 ± 0.012	THREE PLACE DECIMAL ±	Q.A.		
SECTION VIEW A - A	CAP	MATERIAL S11	COMMENTS:		
		COLORANT 206 BLACK			
NEXT ASSY	USED ON	LINER NA			
APPLICATION		DO NOT SCALE DRAWING			

PROPRIETARY AND CONFIDENTIAL
THE INFORMATION CONTAINED IN THIS DRAWING IS THE SOLE PROPERTY OF PARKWAY PLASTICS INC. ANY REPRODUCTION IN PART OR AS A WHOLE WITHOUT THE WRITTEN PERMISSION OF PARKWAY PLASTICS INC IS PROHIBITED.

PARKWAY PLASTICS INC

TITLE: 120 MM RIBBED BLACK CAP (CUSTOMER PRINT)

SIZE	DWG. NO.	REV
C	C120C4RPLIB	

SCALE: 1:1 | WEIGHT: | SHEET 1 OF 1